Yuasa Technical Data Sheet

Yuasa YTX14L-BS - Maintenance Free Battery

Performance

Voltage	12V
Capacity (10-hour)	12Ah
Capacity (20-hour)	12.6Ah
CCA @ -18°C	200A

Dimensions (±2mm)

Length	150mm
Width	87mm
Height	145mm

Weights & Measures

Mean Weight with Acid	4.6kg
Acid Volume	0.69l

Mounting Angle

Angle A	30°
Angle B	20°
Angle C	20°

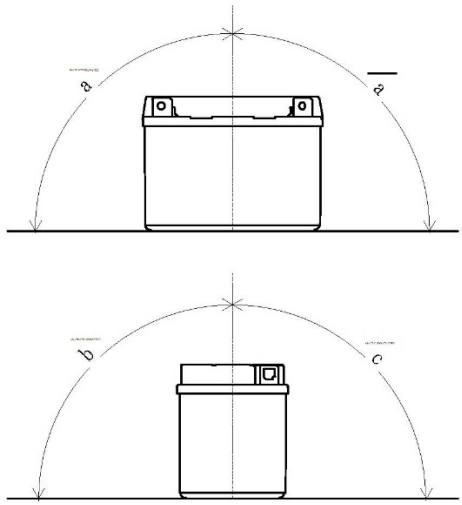

Technology

Separator	AGM

Cell Assembly Layout

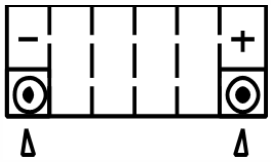

Terminal Type - 5

Data Sheet generated on 12/12/2016 – E&OE